PIG VALVES

Safe and Efficient Pigging

Argus

Spec. 6D – 0225
Edmonton, AB

At Argus, we are committed to product safety and quality. Our pigging valves conform to the following design & testing standards:

API	**American Petroleum Institute**
SPEC. 6D	Specification for Pipeline Valves
SPEC. 6FA*	Fire Test for Valves
STD. 607*	Fire Test for Quarter-turn Valves and Valves Equipped with Nonmetallic Seats
STD. 598	Valve Inspection and Testing
SPEC. Q1	Specification for Quality Programs for the Petroleum and Natural Gas Industry
ANSI/ASME	**American National Standard Institute/ American Society of Mechanical Engineers**
B1.20.1	Pipe threads, general purpose
B16.5	Pipe flanges & flange fittings
B16.10	Face-to-Face & End-to-End dimensions of Valves
B16.34	Valves - Flanged, Threaded and Welding End
B31.3	Process Piping
ISO	**International Organization for Standardization**
ISO 9001	Quality Management Systems
ISO 15156	Materials for use in H2S containing environments in oil & gas production
ISO 10497*	Testing of valves - fire type-testing
NACE	**National Association of Corrosion Engineers**
MR0175	Materials for use in H2S containing environments in oil & gas production
CSA	**Canadian Standards Association**
Z245.12	Steel Flanges
Z245.15	Steel Valves
Z662	Oil and Gas Pipeline Systems
CRN†	**Canadian Registration Numbers**
0C02161.2	2" - 6" Pig Valves
0C12579.2	6" - 16" Pig Valves

** Model D, 300 Class and Larger.*
† Contact Argus for details.

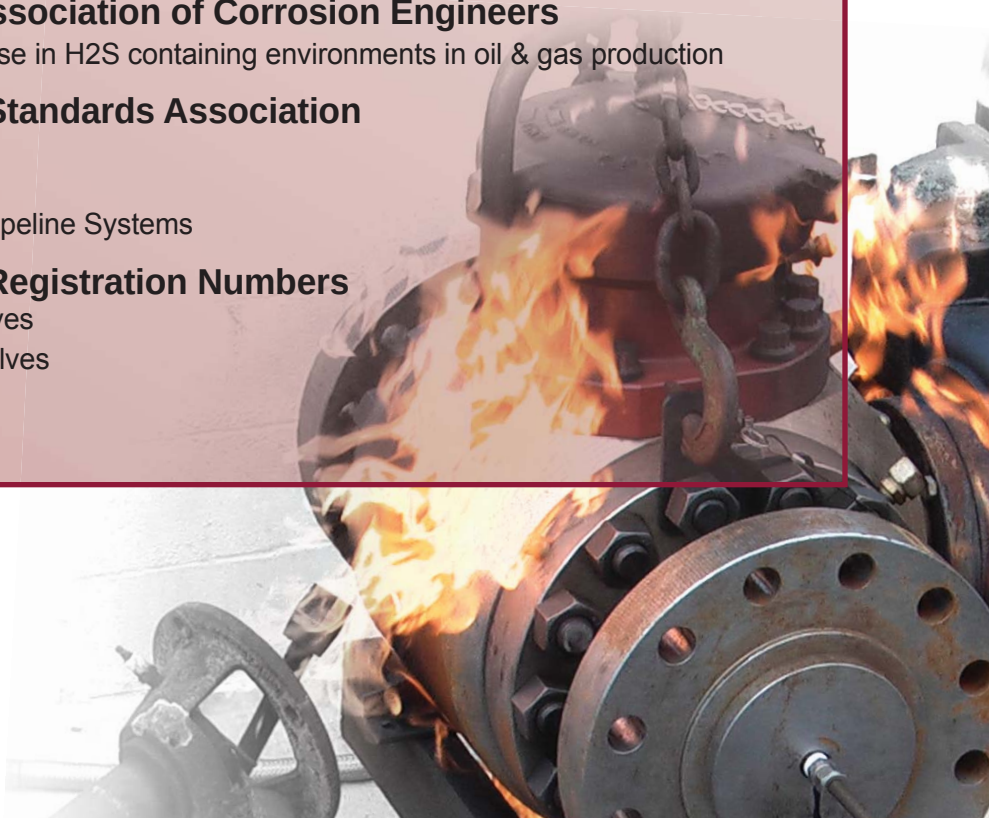

Designed to achieve optimal flow line and pipeline performance, the Argus Pigging Valve offers unsurpassed quality and reliability.

CONSIDER THESE BENEFITS

- **Optimize production and mitigate corrosion through effective liquids sweeping and debris removal**
- **Reduce emissions by more than 80% compared to traditional launching methods**
- **Built in features enhance safety for Operations personnel**
- **Significantly smaller footprint reduces the space required for pigging facilities**
- **Simple configuration and a reduced requirement for infrastructure decreases field construction time**
- **Functionally simple design minimizes training and maintenance costs**
- **Double block and bleed construction facilitates use as a traditional block valve, thus reducing the number of valves required in the pigging facility**
- **Designed in accordance to NACE for sour service**
- **Designed for low-temperature liquid or gas applications with a standard temperature range of -50°F to +250°F (-46°C to +121°C)**
- **Alternative valve materials are available to accommodate all pigging conditions**

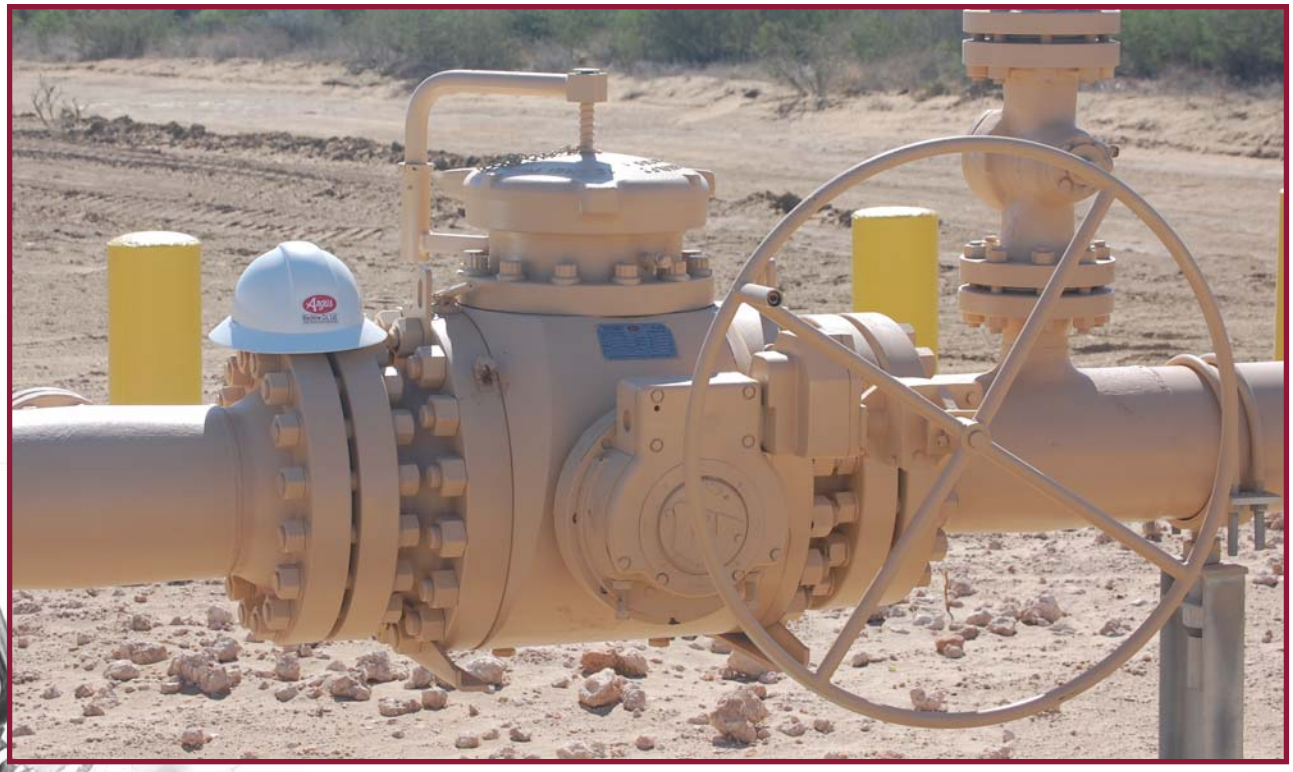

REDUCE EMISSIONS BY MORE THAN 80%

EMISSIONS COMPARISON

Argus Pig Valve vs. Barrel Style Launching and Receiving Traps

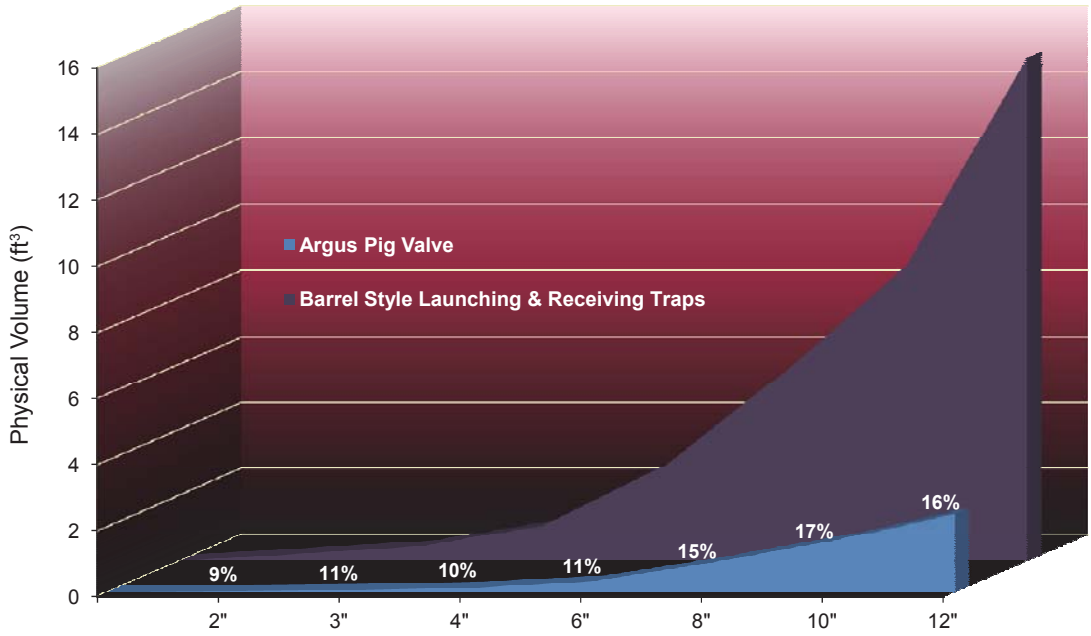

SIGNIFICANT SPACE & COST SAVINGS

In addition to reduced emissions, the small footprint of the Argus Pig Valve minimizes environmental impact. Compared to conventional barrel style launching and receiving traps, Argus Pig Valves are also operationally more efficient, and require less space, ultimately decreasing infrastructure costs.

Argus Receiving Valve

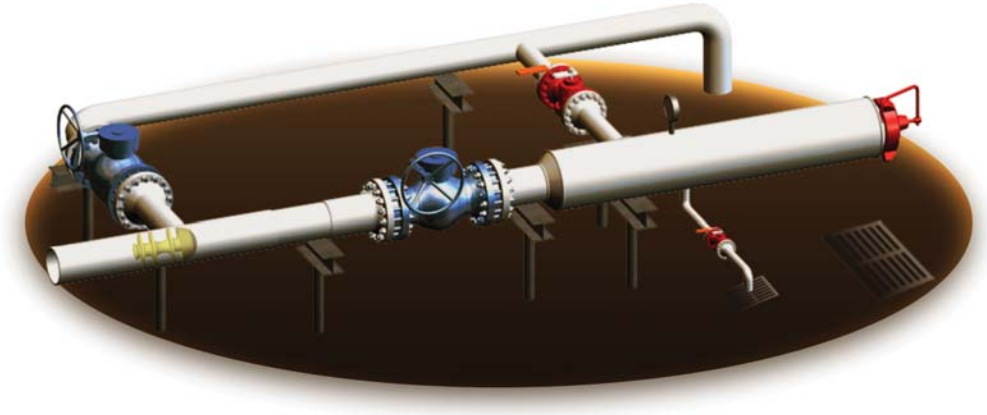

Barrel Style Receiving Trap

SAFETY FEATURES

The 2" - 6" Argus Pig Valves feature a non-impact cap and wrench. This design addresses two key safety concerns in the field - failure of the entry cap due to repeated hammering, and the generation of sparks in an explosive environment.

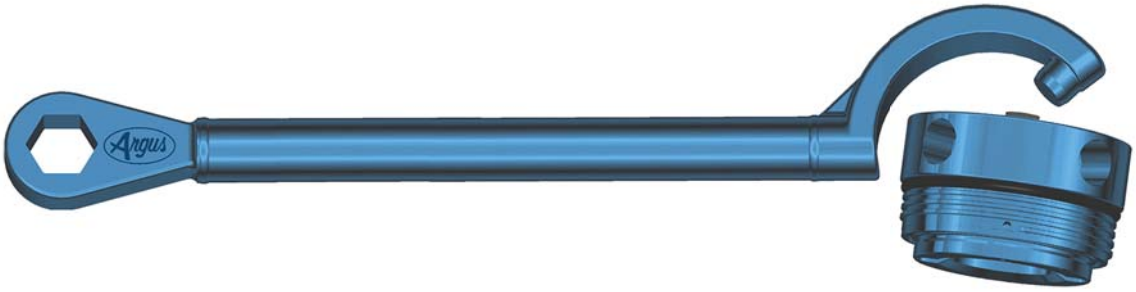

The cap is equipped with a pressure alert port. This enables pressure to be vented to the atmosphere in the event of incomplete venting or seat leakage, warning the operator that media is present.

TRIM MATERIALS

TRIM MATERIALS OF STANDARD VALVES (6" 600 ANSI & BELOW)	
Body	A350-LF2, Class 1
End Connections	A350-LF2, Class 1
Ball	A350-LF2 c/w 0.001" high-phosphorus ENC
Entry Cap	A350-LF2, Class 1
Trunnion	A350-LF2 c/w 0.001" ENC
Seat Springs	Inconel X-750
Seat Support	AISI 1026 c/w 0.001" ENC *(2")* A350-LF2 c/w 0.001" *(3", 4", & 6" 150-600 ANSI)*
Seat Insert	Devlon 'V'
Primary Seals	HSN, Carboxylated Nitrile
Bolting – Pressure Containing	ASTM A320 L7M/ASTM A194 L7M

Note: Alternative trim materials available upon request.

DIMENSIONS – 6" 600 ANSI & BELOW

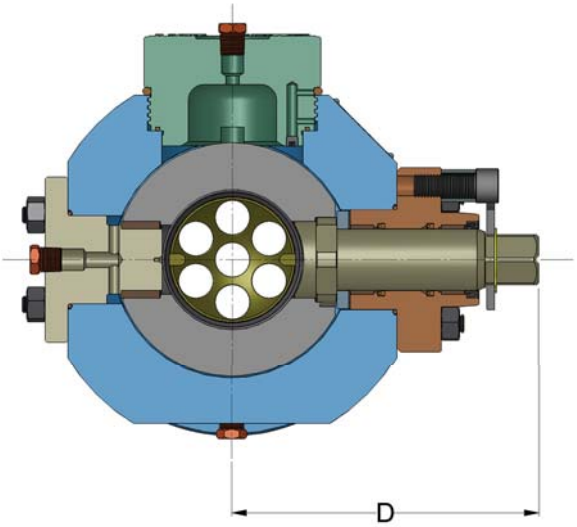

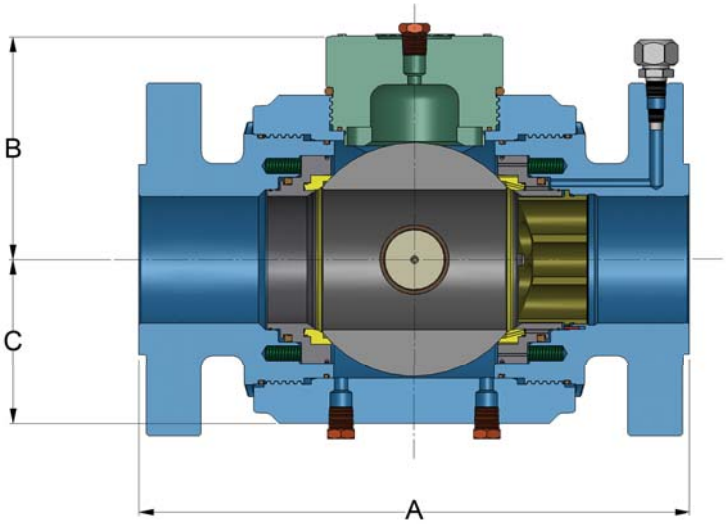

2" Pig Valve	A (Overall Length)				B		C		D		VALVE BORE		BALL CORE ID		ENTRY PLUG BORE		APPROX. Wt.	
	RF		RTJ															
ANSI	in	*(mm)*	in	*(mm)*	in	*(mm)*	in	*(mm)*	in	*(mm)*	in	*(mm)*	in	*(mm)*	in	*(mm)*	lbs	*(kg)*
150*	11.50	*(292)*	11.88	*(302)*	5.62	*(143)*	4.00	*(102)*	7.62	*(194)*	2.06	*(52)*	2.50	*(64)*	2.56	*(65)*	135	*(61)*
300/600*	14.25	*(362)*	14.62	*(371)*	5.62	*(143)*	4.00	*(102)*	7.62	*(194)*	2.06	*(52)*	2.50	*(64)*	2.56	*(65)*	145	*(66)*
900	14.50	*(368)*	14.62	*(371)*	5.62	*(143)*	4.00	*(102)*	7.62	*(194)*	2.06	*(52)*	2.50	*(64)*	2.56	*(65)*	175	*(79)*

3" Pig Valve	A (Overall Length)				B		C		D		VALVE BORE		BALL CORE ID		ENTRY PLUG BORE		APPROX. Wt.	
	RF		RTJ															
ANSI	in	*(mm)*	in	*(mm)*	in	*(mm)*	in	*(mm)*	in	*(mm)*	in	*(mm)*	in	*(mm)*	in	*(mm)*	lbs	*(kg)*
150*	12.75	*(324)*	13.12	*(333)*	6.38	*(162)*	4.75	*(121)*	8.38	*(213)*	3.12	*(79)*	3.56	*(90)*	3.59	*(91)*	190	*(86)*
300*/600	14.00	*(356)*	14.12	*(359)*	6.38	*(162)*	4.75	*(121)*	8.38	*(213)*	3.12	*(79)*	3.56	*(90)*	3.59	*(91)*	210	*(95)*
900	15.00	*(381)*	15.12	*(384)*	6.38	*(162)*	4.75	*(121)*	8.38	*(213)*	3.12	*(79)*	3.56	*(90)*	3.59	*(91)*	230	*(104)*

4" Pig Valve	A (Overall Length)				B		C		D		VALVE BORE		BALL CORE ID		ENTRY PLUG BORE		APPROX. Wt.	
	RF		RTJ															
ANSI	in	*(mm)*	in	*(mm)*	in	*(mm)*	in	*(mm)*	in	*(mm)*	in	*(mm)*	in	*(mm)*	in	*(mm)*	lbs	*(kg)*
150*	15.50	*(394)*	16.00	*(406)*	7.34	*(186)*	5.35	*(136)*	10.03	*(255)*	4.12	*(105)*	4.56	*(116)*	4.59	*(117)*	310	*(141)*
300*	16.00	*(406)*	16.50	*(419)*	7.34	*(186)*	5.35	*(136)*	10.03	*(255)*	4.12	*(105)*	4.56	*(116)*	4.59	*(117)*	325	*(147)*
600	17.00	*(432)*	17.12	*(435)*	7.34	*(186)*	5.35	*(136)*	10.03	*(255)*	4.12	*(105)*	4.56	*(116)*	4.59	*(117)*	350	*(159)*
900	18.00	*(457)*	18.12	*(460)*	7.34	*(186)*	5.35	*(136)*	10.03	*(255)*	4.12	*(105)*	4.56	*(116)*	4.59	*(117)*	370	*(168)*
1500†	21.50	*(546)*	21.62	*(549)*	7.50	*(191)*	6.25	*(159)*	15.38	*(391)*	4.00	*(102)*	4.75	*(121)*	4.97	*(126)*	600	*(272)*

6" Pig Valve	A (Overall Length)				B		C		D		VALVE BORE		BALL CORE ID		ENTRY PLUG BORE		APPROX. Wt.	
	RF		RTJ															
ANSI	in	*(mm)*	in	*(mm)*	in	*(mm)*	in	*(mm)*	in	*(mm)*	in	*(mm)*	in	*(mm)*	in	*(mm)*	lbs	*(kg)*
150*	18.00	*(457)*	18.38	*(467)*	9.50	*(241)*	7.12	*(181)*	12.12	*(308)*	6.12	*(155)*	6.75	*(172)*	6.72	*(171)*	580	*(263)*
300*	18.88	*(480)*	19.38	*(492)*	9.50	*(241)*	7.12	*(181)*	12.12	*(308)*	6.12	*(155)*	6.75	*(172)*	6.72	*(171)*	620	*(281)*
600	22.00	*(559)*	22.12	*(562)*	9.50	*(241)*	7.12	*(181)*	12.12	*(308)*	6.12	*(155)*	6.75	*(172)*	6.72	*(171)*	700	*(317)*

**Face to Face Length does not meet API Spec, '6D', ASME 'B16.10', or CSA 'Z245.15.*
†Supplied with Gear Operator.
Note: Design specifications subject to change without prior notice.

PIG VALVE ORIENTATION

ORIENTATION 1

FLOW DIRECTION: LEFT TO RIGHT

LAUNCHER

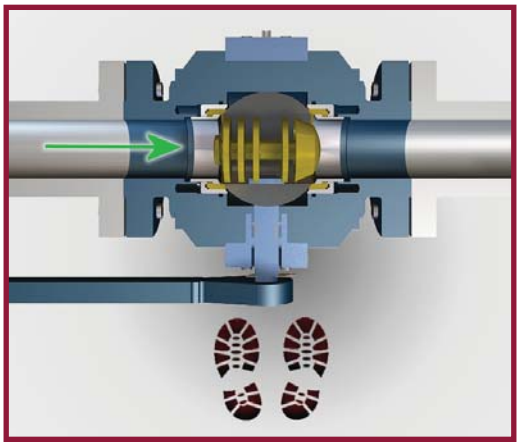

L R

RECEIVER

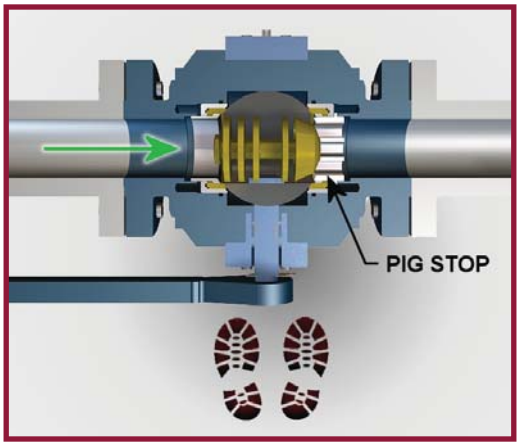

ORIENTATION 2

FLOW DIRECTION: RIGHT TO LEFT

LAUNCHER

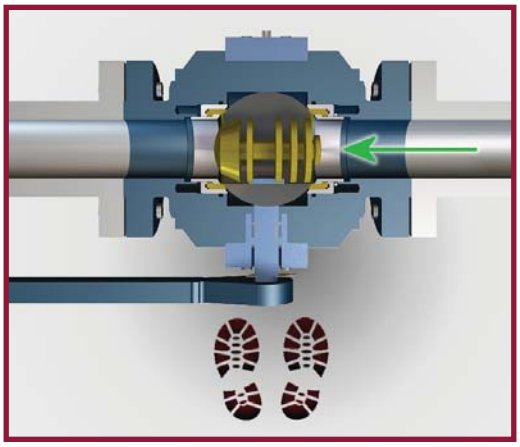

L R

RECEIVER

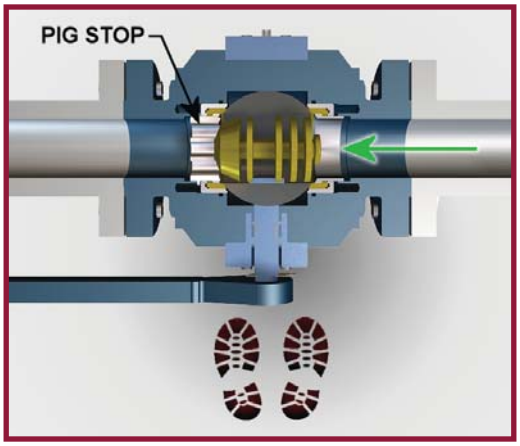

OPERATIONAL SEQUENCE – 6" 600 ANSI & BELOW

LAUNCHING

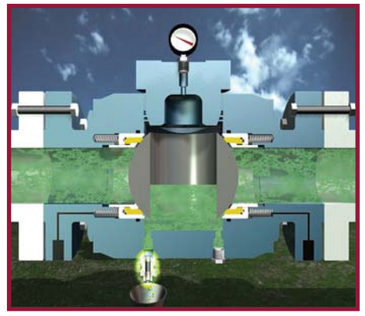

STEP 1

Close the pig valve to achieve positive shut-off in both directions. Vent the body cavity.

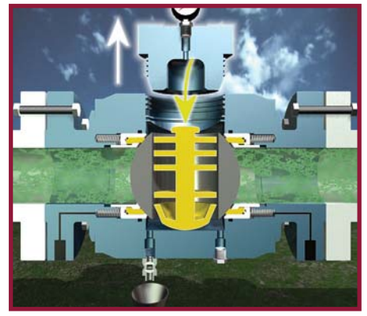

STEP 2

Remove the entry cap. Insert the pig into ball cavity.

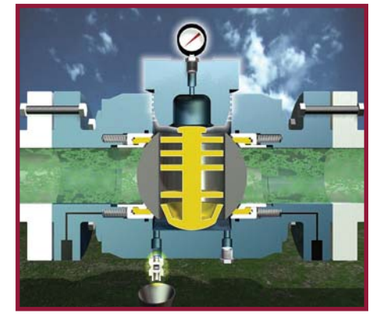

STEP 3

Reinstall the entry cap. Close all bleed valves.

(If valve is equipped with a pressure equalization line, open the Eq. Valve to equalize pressure).

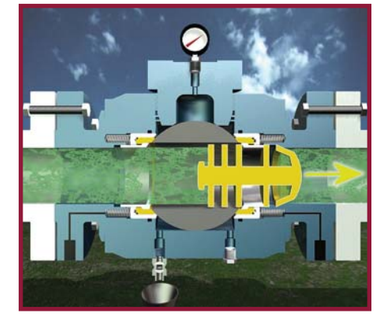

STEP 4

Open the pig valve. Flow and pressure moves the pig downstream.

LAUNCHING

RECEIVING

STEP 1

Close the pig valve to achieve positive shut-off in both directions. Vent the body cavity.

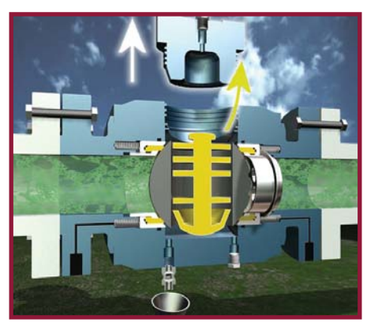

STEP 2

Remove the entry cap. Remove the pig from the ball cavity.

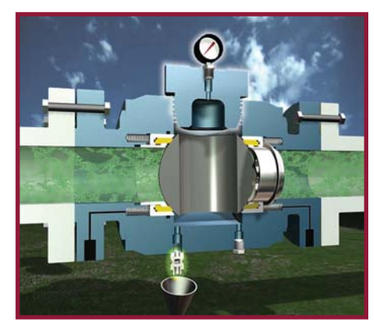

STEP 3

Reinstall the entry cap. Close all bleed valves.

(If valve is equipped with a pressure equalization line, open the Eq. Valve to equalize pressure).

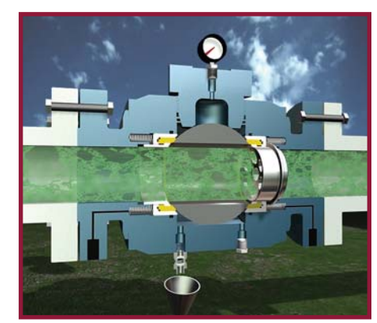

STEP 4

Open the pig valve into the flowing position.

RECEIVING

DIMENSIONS – 6" 900 ANSI & ABOVE

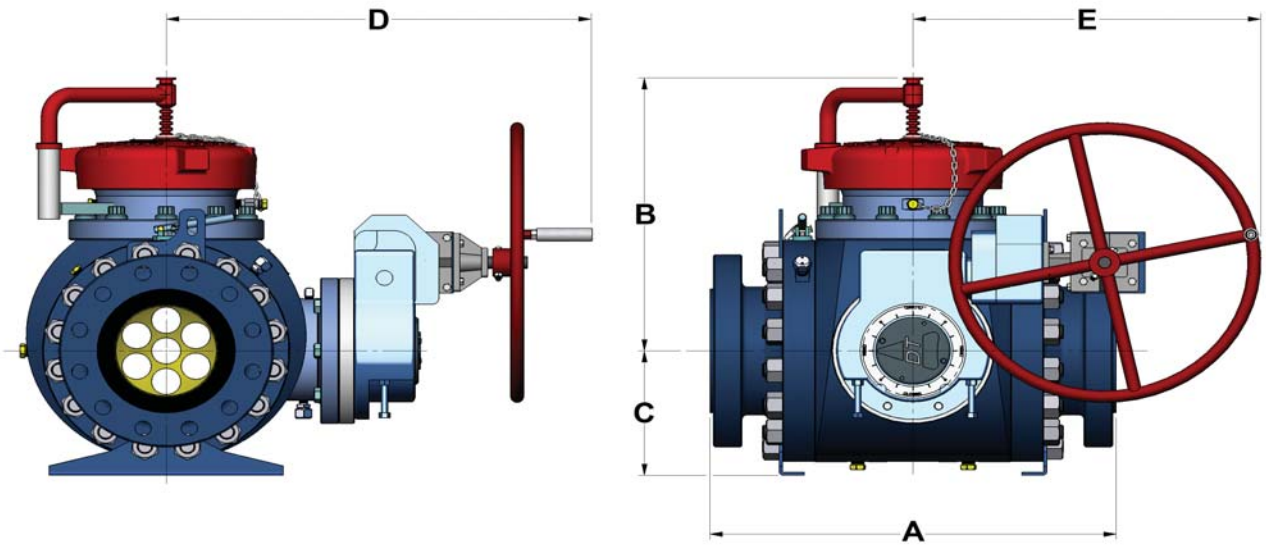

6" Pig Valve	A (Overall Length)*				B		C		D		E		VALVE BORE		BALL CORE ID		ENTRY PLUG BORE		APPROX. Wt.	
	RF		RTJ																	
ANSI	in	(mm)	in	(mm)	in	(mm)	in	(mm)	in	(mm)	in	(mm)	in	(mm)	in	(mm)	in	(mm)	lbs	(kg)
900	29.00	(737)	29.12	(740)	22.38	(568)	8.79	(223)	29.97	(761)	24.65	(626)	6.00	(152)	6.62	(168)	6.75	(171)	1460	(662)
1500	Consult with Argus for 1500 ANSI Data																			

8" Pig Valve	A (Overall Length)*				B		C		D		E		VALVE BORE		BALL CORE ID		ENTRY PLUG BORE		APPROX. Wt.	
	RF		RTJ																	
ANSI	in	(mm)	in	(mm)	in	(mm)	in	(mm)	in	(mm)	in	(mm)	in	(mm)	in	(mm)	in	(mm)	lbs	(kg)
150	Consult with Argus for 150 ANSI Data																			
300	28.50	(724)	29.00	(737)	23.37	(594)	10.67	(271)	32.70	(831)	26.72	(679)	8.00	(203)	9.00	(229)	8.75	(222)	2075	(941)
600	31.20	(792)	31.32	(796)	23.37	(594)	10.67	(271)	32.70	(831)	26.72	(679)	8.00	(203)	9.00	(229)	8.75	(222)	2225	(1009)
900	35.00	(889)	35.12	(892)	24.65	(626)	11.24	(285)	33.34	(847)	31.72	(806)	8.00	(203)	8.88	(226)	8.75	(222)	2785	(1263)
1500	42.00	(1067)	42.38	(1076)	31.51	(800)	12.74	(324)	35.61	(904)	32.33	(821)	8.00	(203)	8.88	(226)	8.75	(222)	4145	(1880)

10" Pig Valve	A (Overall Length)*				B		C		D		E		VALVE BORE		BALL CORE ID		ENTRY PLUG BORE		APPROX. Wt.	
	RF		RTJ																	
ANSI	in	(mm)	in	(mm)	in	(mm)	in	(mm)	in	(mm)	in	(mm)	in	(mm)	in	(mm)	in	(mm)	lbs	(kg)
300	35.36	(898)	35.86	(911)	26.09	(663)	12.00	(305)	34.56	(878)	32.33	(821)	10.00	(254)	11.00	(279)	10.75	(273)	3225	(1463)
600	37.12	(943)	37.25	(946)	26.09	(663)	12.00	(305)	34.56	(878)	32.33	(821)	10.00	(254)	11.00	(279)	10.75	(273)	3400	(1542)
150 , 900 , 1500	Consult with Argus for 150, 900, and 1500 ANSI Data																			

12" Pig Valve	A (Overall Length)*				B		C		D		E		VALVE BORE		BALL CORE ID		ENTRY PLUG BORE		APPROX. Wt.	
	RF		RTJ																	
ANSI	in	(mm)	in	(mm)	in	(mm)	in	(mm)	in	(mm)	in	(mm)	in	(mm)	in	(mm)	in	(mm)	lbs	(kg)
300	40.75	(1035)	41.25	(1048)	29.15	(740)	14.17	(360)	38.88	(988)	36.67	(931)	12.00	(305)	13.00	(330)	12.75	(324)	5120	(2322)
600	42.06	(1068)	42.19	(1071)	29.15	(740)	14.17	(360)	38.88	(988)	36.67	(931)	12.00	(305)	13.00	(330)	12.75	(324)	5300	(2404)
900	47.00	(1194)	47.12	(1197)	32.15	(817)	15.38	(391)	37.67	(957)	32.33	(821)	12.00	(305)	13.00	(330	12.75	(324)	6340	(2875)
150 , 1500	Consult with Argus for 150 and 1500 ANSI Data																			

16" Pig Valve	A (Overall Length)*				B		C		D		E		VALVE BORE		BALL CORE ID		ENTRY PLUG BORE		APPROX. Wt.	
	RF		RTJ																	
ANSI	in	(mm)	in	(mm)	in	(mm)	in	(mm)	in	(mm)	in	(mm)	in	(mm)	in	(mm)	in	(mm)	lbs	(kg)
300	54.00	(1372)	54.50	(1384)	48.51	(1232)	17.12	(435)	41.57	(1056)	36.67	(931)	15.25	(387)	16.25	(413)	16.25	(413)	9035	(4098)
600	54.00	(1372)	54.12	(1375)	48.51	(1232)	17.12	(435)	41.57	(1056)	36.67	(931)	15.25	(387)	16.25	(413)	16.25	(413)	9035	(4098)
150 , 900 , 1500	Consult with Argus for 150, 900, and 1500 ANSI Data																			

**Face to Face Length does not meet API Spec, '6D', ASME 'B16.10', or CSA 'Z245.15. Design specifications subject to change without prior notice.*

SAFETY FEATURES

1. **PRESSURE ALERT VALVE**
   The operator must check and confirm that the body cavity has been successfully bled down or vented.
2. **PRESSURE WARNING GROOVE**
   Allows the media to easily communicate with the atmosphere, warning the operator prior to removal of the entry cap under pressure.
3. **PRESSURE EQUALIZATION VALVE SAFETY PIN**
   Prevents accidental operation of the equalization valve during the pigging process.
4. **LIFTING LUGS**
   Provides for safe handling of the pig valve during installation or repair.
5. **ENTRY CAP WRENCH**
   Designed to fit over the entry cap lugs, thus eliminating impact and sparking hazards associated with entry cap.

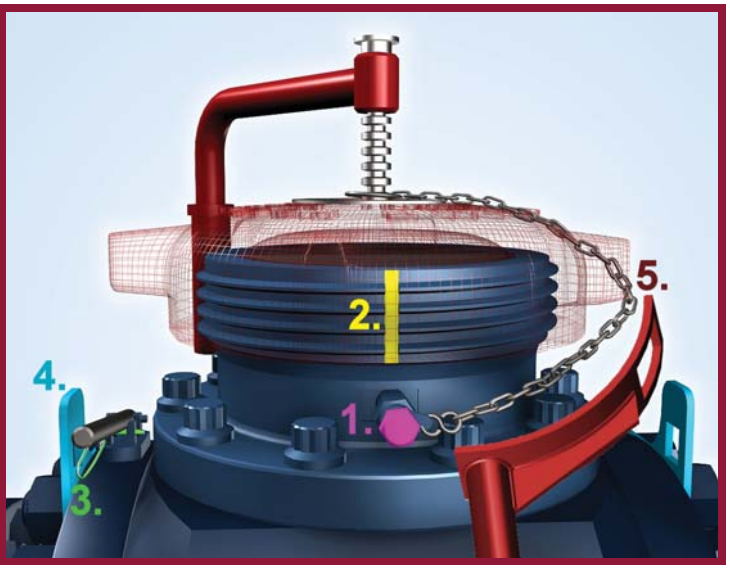

TRIM MATERIALS

TRIM MATERIALS FOR STANDARD VALVES (6" 900 ANSI & ABOVE)	
Body	A350-LF2, Class 1
End Connections	A350-LF2, Class 1
Ball	A350-LF2 c/w 0.001" High-Phosphorus ENC
Entry Cap	A350-LF2, Class 1
Trunnion Bearing Plate	A516-Gr. 70
Seat Spring	Inconel X-750
Seat Support	A350-LF2, Class 1 c/w 0.001" ENC
Seat Insert	Devlon ‘V’
Primary Seals	HSN
Bolting – Pressure Containing	ASTM A320 L7M/ASTM A194 L7M

Note: Alternative trim materials available upon request.

OPERATIONAL SEQUENCE – 6" 900 ANSI & ABOVE

LAUNCHING

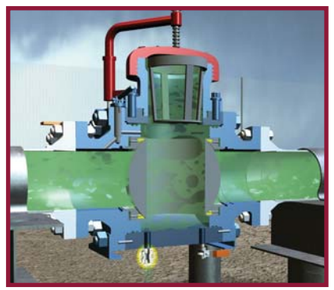

STEP 1

Close the pig valve to achieve positive shut-off in both directions. Vent the body cavity.

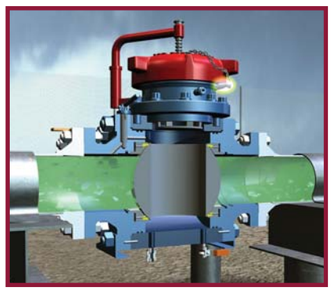

STEP 2

Remove the pressure alert valve stem.

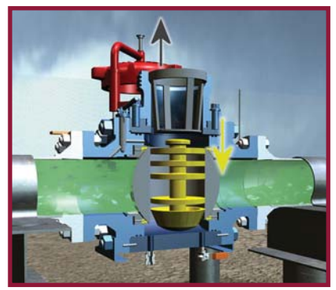

STEP 3

Remove the entry cap and pig restrictor. Insert the pig into the ball cavity.

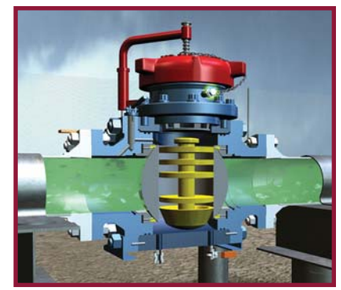

STEP 4

Reinstall the pig restrictor, then entry cap, and finally the pressure alert valve stem.

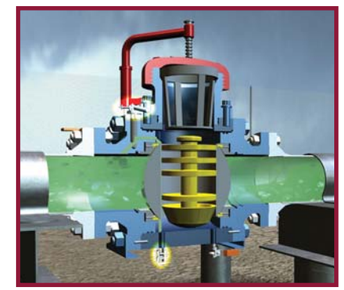

STEP 5

Close all bleed valves. Remove the safety release pin from the pressure equalization valve. Depress the operating lever.

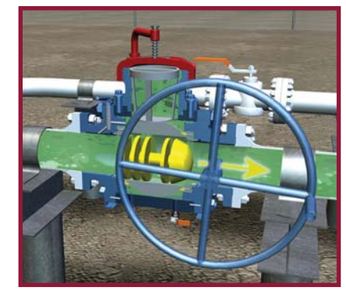

STEP 6

Replace the safety release pin. Open the pig valve into the flowing position.

LAUNCHING

RECEIVING

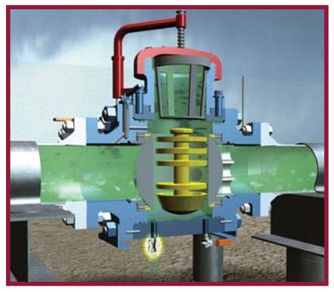

STEP 1

Close the pig valve to achieve positive shut-off in both directions. Vent the body cavity.

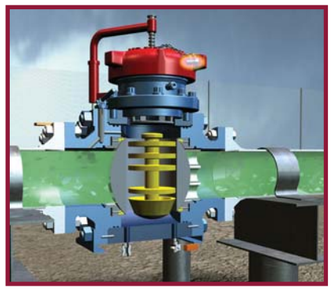

STEP 2

Remove the pressure alert valve stem.

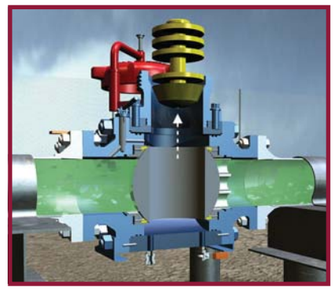

STEP 3

Remove the entry cap. Then remove the pig restrictor and pig from the ball cavity.

STEP 4

Reinstall the pig restrictor, then entry cap, and finally the pressure alert valve stem.

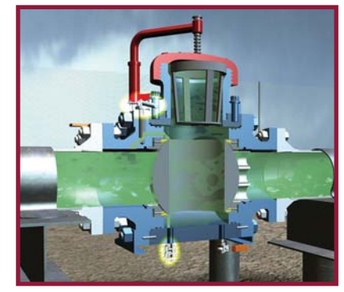

STEP 5

Close all bleed valves. Remove the safety release pin from the pressure equalization valve. Depress the operating lever.

STEP 6

Replace the safety release pin. Open the pig valve into the flowing position.

RECEIVING

ARGUS URETHANE PIGS

FEATURES

- Cup and disc style
- Compatible with fiber reinforced line pipe products
- Can be supplied with rare earth magnets for non-intrusive passage indication
- Filming pigs also available (for batch, corrosion inhibition programs)

ARGUS LOW FLOW PIGS

- 2 cup design allows for launching at low differential pressures
- Multiple sealing points and maximized length make it ideal for passing through pipeline fittings such as check valves, Y-laterals, and T's
- Flexibility allows for negotiation of the majority of standard radius bends and minor pipeline deformities

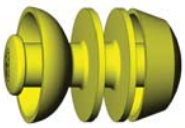

NOMINAL PIG SIZE	PIPE WALL THICKNESS		PIG LENGTH		COLOUR	DUROMETER (SHORE 'A')
	in	(mm)	in	(mm)		
2 INCH	.154 - .188	(3.91 - 4.78)	4.50	(114.3)	GREY	60
					YELLOW	70
					BLUE	80
					BLACK	90
3 INCH	.109 - .125	(2.77 - 3.18)	5.75	(146.1)	PURPLE	60
					GREEN	70
					RED	80
					ORANGE	90
	.156 - .188	(3.96 - 4.78)	5.75	(146.1)	GREY	60
					YELLOW	70
					BLUE	80
					BLACK	90
4 INCH	.109 - .125	(2.77 - 3.18)	7.50	(190.5)	PURPLE	60
					GREEN	70
					RED	80
					ORANGE	90
	.156 - .188	(3.96 - 4.78)	7.50	(190.5)	GREY	60
					YELLOW	70
					BLUE	80
					BLACK	90
6 INCH	.109 - .125	(2.77 - 3.18)	10.50	(266.7)	PURPLE	60
					GREEN	70
					RED	80
					ORANGE	90
	.156 - .280	(3.96 - 7.11)	10.50	(266.7)	GREY	60
					YELLOW	70
					BLUE	80
					BLACK	90
8 INCH	.250 - .375	(6.35 - 9.53)	14.25	(362.0)	GREY	60
					YELLOW	70
					BLUE	80
					BLACK	90
10 INCH	.250 - .438	(6.35 -11.13)	17.25	(438.0)	GREY	60
					YELLOW	70
					BLUE	80
					BLACK	90
12 INCH	.250 - .500	(6.35 -12.70)	20.00	(508.0)	GREY	60
					YELLOW	70
					BLUE	80
					BLACK	90
16 INCH	Consult with Argus for Data and Style					

Note: Contact Argus for low flow sizes and specifications.

SMALL DIAMETER

3" 600 ANSI Bahia, Brazil

6" 600 ANSI with 6" bypass line, Tamaulipas, Mexico

LARGE DIAMETER

8" 600 ANSI Haynesville Shale Gas, Louisiana, USA

12" 600 ANSI Eagleford Shale Gas, Texas, USA

CONTACT US

ARGUS MACHINE CO. LTD.

1.780.434.9451

info@argusmachine.com

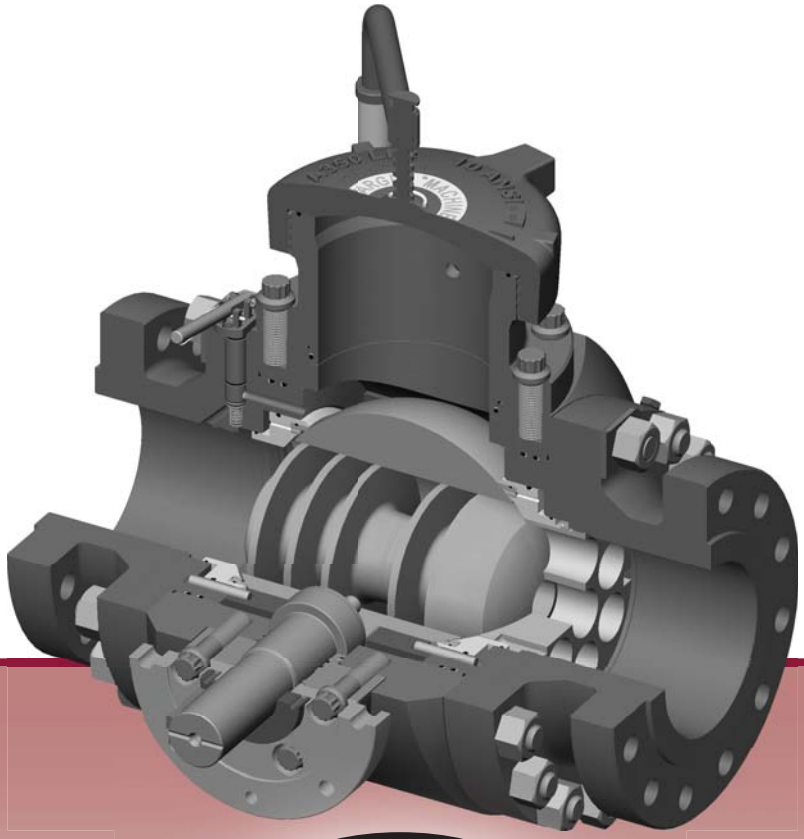

argusmachine.com

© Copyright 2012 Argus Machine Co. Ltd.

Design specifications subject to change without prior notice.

ARGUS GROUP OF COMPANIES

Calgary • Edmonton • Houston • Nisku